25B	0	33D	1 of 1	RESIDENTIAL
Map	Parcel	Lot	CARD	

Town of Nahant

	Total Card	/	Total Parcel
APPRAISED:	3,239,900	/	3,239,900
USE VALUE:	3,239,900	/	3,239,900
ASSESSED:	3,239,900	/	3,239,900

PROPERTY LOCATION

No	Alt No	Direction/Street/City
3		HOWE RD, NAHANT

OWNERSHIP

Unit #:

Owner 1:	LANG, JAMES P &
Owner 2:	LANG, GINA MAIRE TEN/ENT
Owner 3:	
Street 1:	3 HOWE RD
Street 2:	
Twn/City:	NAHANT
St/Prov:	MA Cntry Own Occ: Y
Postal:	01908 Type:

PREVIOUS OWNER

Owner 1:	CORTI, JOY -
Owner 2:	-
Street 1:	P.O. BOX 392
Twn/City:	BOSTON
St/Prov:	MA Cntry
Postal:	02117

NARRATIVE DESCRIPTION

This parcel contains .313 ACRES of land mainly classified as ONE FAM with a CONTEMPORARY Building built about 2002, having primarily CLAPBOARD Exterior and 5546 Square Feet, with 1 Unit, 2 Baths, 4 3/4 Baths, 0 HalfBath, 9 Rooms, and 5 Bdrms.

OTHER ASSESSMENTS

Code	Descrip/No	Amount	Com. Int

PROPERTY FACTORS

Item	Code	Description	%	Item	Code	Description
Z	R2	RES 2		water		
o				Sewer		
n				Electri		
Census:	2011			Exmpt		
Flood Haz:	C					
D				Topo		
s				Street		
t				Gas:		

IN PROCESS APPRAISAL SUMMARY

Use Code	Land Size	Building Value	Yard Items	Land Value	Total Value
101	0.313	2,264,100		975,800	3,239,900
Total Card	0.313	2,264,100		975,800	3,239,900
Total Parcel	0.313	2,264,100		975,800	3,239,900

Source: Market Adj Cost | Total Value per SQ unit /Card: 584.14 | /Parcel: 584.14

Legal Description: 1550.00

Entered Lot Size	
Total Land:	
Land Unit Type:	

User Acct	GIS Ref	GIS Ref	Insp Date
0			04/07/26

!1408!

PREVIOUS ASSESSMENT

Parcel ID: 25B-0-33D

Tax Yr	Use	Cat	Bldg Value	Yrd Items	Land Size	Land Value	Total Value	Asses'd Value	Notes	Date
2027	101	NC	2,264,100	0	.313	975,800	3,239,900		Year End Roll	9/21/2026
2026	101	FV	2,240,000	0	.313	975,800	3,215,800		Year End Roll	9/12/2025
2026	101	NC	2,240,000	0	.313	975,800	3,215,800		Year End Roll	8/26/2025
2025	101	FV	2,125,000	0	.313	931,400	3,056,400		Year End Roll	9/5/2024
2025	101	NC	2,125,000	0	.313	931,400	3,056,400		Year End Roll	8/21/2024
2024	101	FV	2,125,000	0	.313	931,400	3,056,400	3,056,400	Year End Roll	9/12/2023
2024	101	NC	2,125,000	0	.313	931,400	3,056,400	3,056,400	Year End Roll	9/5/2023
2023	101	FV	1,917,400	0	.313	913,700	2,831,100	2,831,100	Final Value	8/10/2022

PRINT

Date	Time
10/21/26	20:50:25

LAST REV

Date	Time
04/20/26	15:00:35

apro

SALES INFORMATION

TAX DISTRICT:

PAT ACCT.: 1408

Grantor	Legal Ref	Type	Date	Sale Code	Sale Price	V	Tst	Verif	Notes
CORTI, JOY,	26970-29		6/28/2007		1,925,000	No	No		
DELTA DEVELOPME	22318-148		1/23/2004		1,800,000	No	No		
NIKOLOPOULOS, N	19162-362		8/30/2002	CONVENIENCE	175,000	Yes	No		
KALOGIANIS ANAS	16410-127		6/23/2000	FAMILY	175,000	Yes	No		FATHER TO DAUGHTER/FAMILY
KALOGIANIS ANAS	15865-409		8/9/1999	PORTION/ASSE	1	No	No		25B.0.33
WELCH LILLIAN E	15581-470		4/2/1999	PORTION/ASSE	660,000	No	No		25B.0.33
WELCH WALTER	10386-125		4/2/1990		100	No	No		25B.0.33

BUILDING PERMITS

Date	Number	Descrip	Amount	C/O	Last Visit	Fed Code	F. Descrip	Comment
6/10/2025	25-00228	OTHER	3,199	C				BUILDING A SMALL S
7/10/2020	R-20-00095	ROOF	75,000	C				Strip Roof. Instal
6/4/2019	R-19-00089	DECK	26,097	C				Repair and replace
5/26/2016	E-16-00049	ELECTRIC		C				Install an 11.475k
5/26/2016	R-16-00065	SOLAR	30,114	C				Install a 11.475kW
5/16/2016	E-16-00047	ELECTRIC		C				Install roof mount
5/16/2016	R-16-00056	SOLAR	7,000	C				Install Solar Elec
1/16/2008	08-R-0010	ADDITION	250,000	C				FIN BMT-KIT,BATH,
11/5/2001	4293	NEW DWEL	200,000	C				

ACTIVITY INFORMATION

Date	Result	By	Name
4/7/2026	PERMIT VISIT	122	PATRIOT
2/4/2021	PERMIT VISIT	122	PATRIOT
3/14/2020	PERMIT VISIT	336	PATRIOT
1/19/2017	PERMIT VISIT	122	PATRIOT
12/21/2012	FIELDREV CHG	500	BOA
4/27/2010	PERMIT VISIT	197	PATRIOT
1/13/2009	PERMIT VISIT	122	PATRIOT
11/21/2005	MEAS+INSPCTD	197	PATRIOT
1/13/2004	INSPECTED	828	SHEILA

Sign: VERIFICATION OF VISIT NOT DATA ___/___/___

USER DEFINED

Prior Id # 1:	25B
Prior Id # 2:	0
Prior Id # 3:	33
Prior Id # 1:	
Prior Id # 2:	
Prior Id # 3:	
Prior Id # 1:	
Prior Id # 2:	
Prior Id # 3:	
ASR Map:	
Fact Dist:	
Reval Dist:	
Year:	
LandReason:	
BldReason:	
CivilDistrict:	
Ratio:	

LAND SECTION (First 7 lines only)

Use Code	Description	LUC Fact	No of Units	Depth / PriceUnits	Unit Type	Land Type	LT Factor	Base Value	Unit Price	Adj	Neigh	Neigh Influ	Neigh Mod	Infl 1	%	Infl 2	%	Infl 3	%	Appraised Value	Alt Class	%	Spec Land	J Code	Fact	Use Value	Notes
101	ONE FAM		13628		SQUARE FE	SITE		0	110.	0.65	OV	1.00		FRNTAG	-20					975,781						975,800	25B.0.33

Total AC/HA:	0.31286	Total SF/SM:	13628	Parcel LUC:	101	ONE FAM	Prime NB Desc	OCEAN VG	Total:	975,781	Spl Credit		Total:	975,800

EXTERIOR INFORMATION

Type:	9 - CONTEMPORARY		
Sty Ht:	2 - 2		
(Liv) Units:	1	Total:	1
Foundation:	1 - CONCRETE		
Frame:	1 - WOOD		
Prime Wall:	2 - CLAPBOARD		
Sec Wall:	16 - STONE VE	10	%
Roof Struct:	1 - GABLE		
Roof Cover:	1 - ASPHALT		
Color:	YELLOW		
View / Desir:			

GENERAL INFORMATION

Grade:	AA - SUPERB		
Year Blt:	2002	Eff Yr Blt:	
Alt LUC:		Alt %:	
Jurisdict:		Fact:	.
Const Mod:			
Lump Sum Adj:			

INTERIOR INFORMATION

Avg Ht/FL:	STD		
Prim Int Wal	1 - DRYWALL		
Sec Int Wall:			%
Partition:	T - TYPICAL		
Prim Floors:	3 - HARDWOOD		
Sec Floors:	4 - CARPET	35	%
Bsmnt Flr:	6 - CERAMIC TL		
Subfloor:			
Bsmnt Gar:			
Electric:	3 - TYPICAL		
Insulation:	2 - TYPICAL		
Int vs Ext:	S		
Heat Fuel:	2 - GAS		
Heat Type:	1 - FORCED H/A		
# Heat Sys:	1		
% Heated:	100	% AC:	100
Solar HW:	Yes	Central Vac:	Yes
% Com Wal		% Sprinkled	

BATH FEATURES

Full Bath	2	Rating:	VERY GOOD
A Bath:		Rating:	
3/4 Bath:	4	Rating:	VERY GOOD
A 3QBth		Rating:	
1/2 Bath:		Rating:	
A HBth:		Rating:	
OthrFix:	1	Rating:	VERY GOOD

OTHER FEATURES

Kits:	1	Rating:	VERY GOOD
A Kits:	1	Rating:	AVERAGE
Frpl:	2	Rating:	AVERAGE
WSFlue:		Rating:	

CONDO INFORMATION

Location:	
Total Units:	
Floor:	
% Own:	
Name:	

DEPRECIATION

Phys Cond:	GD - Good	7.3	%
Functional:			%
Economic:			%
Special:			%
Override:			%
Total:		7.3	%

CALC SUMMARY

Basic $ / SQ:	185.00
Size Adj.:	0.77997327
Const Adj.:	1.23565197
Adj $ / SQ:	178.298
Other Features:	260351
Grade Factor:	2.00
NBHD Inf:	1.00000000
NBHD Mod:	
LUC Factor:	1.00
Adj Total:	2439565
Depreciation:	178088
Depreciated Total:	2261476

COMMENTS

50 NAHANT RD HOME TORN DOWN AND LAND DIVIDED 8/1999.

RESIDENTIAL GRID

1st Res Grid	Desc:	Line 1	# Units	1

Level	FY	LR	DR	D	K	FR	RR	BR	FB	HB	L	O
Other												
Upper												
Lvl 2												
Lvl 1												
Lower												
Totals	RMs:	9	BRs:	5	Baths:	2	HB					

REMODELING

Exterior:	
Interior:	
Additions:	
Kitchen:	
Baths:	
Plumbing:	
Electric:	
Heating:	
General:	

RES BREAKDOWN

No Unit	RMS	BRS	FL
1	9	5	M
Totals			
1	9	5	

SKETCH

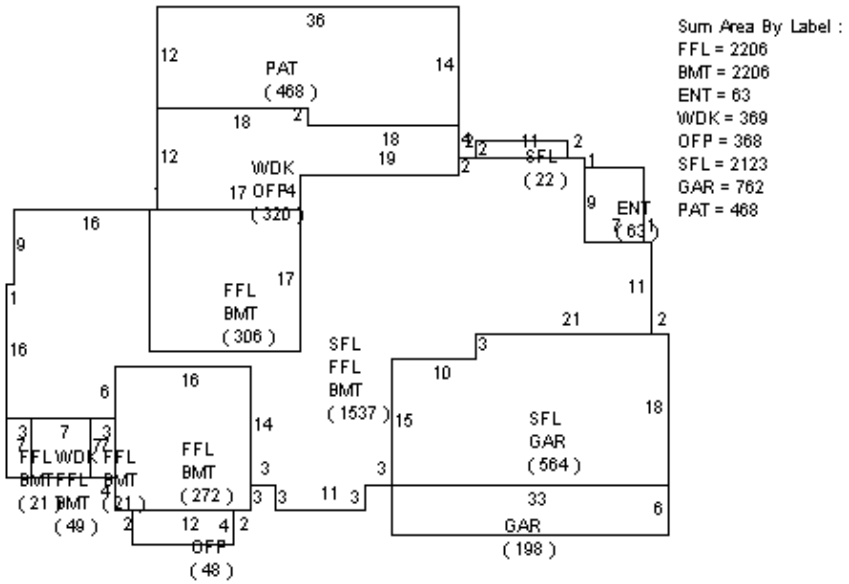

SUB AREA

Code	Description	Area - SQ	Rate - AV	Undepr Value
BMT	BASEMENT	2,206	77.560	171,097
FFL	1ST FLOOR	2,206	178.300	393,326
SFL	2ND FLOOR	2,017	178.300	359,601
GAR	GARAGE	762	28.240	21,516
PAT	PATIO	468	5.030	2,353
WDK	WOOD DECK	369	8.080	2,983
OFP	OPEN PORCH	368	20.200	7,432
ENT	ENTRY	63	17.830	1,123
	Net Sketched Area:	8,459	Total:	959,431
Size Ad	4222.8500	Gross Area	8565	FinArea 5546

SUB AREA DETAIL

Sub Area	% Usbl	Descrip	% Type	Qu	# Ten
BMT	100	FLA	60		
SFL	95				

COMPARABLE SALES

Rate	Parcel ID	Typ	Date	Sale Price
76.1	12C-0-46		10/24/2005	1,000,000
69	23-0-75		8/15/2005	1,750,000
65.1	17-0-20		12/18/2006	1,012,500
65.1	22-0-7		6/26/2006	571,000
65	3A-0-12		1/20/2006	995,000
64.5	7-0-31		7/31/2006	999,000
WtAv$/SQ:		AvRate:	67.46	Ind.Val 4276900.000

Juris. Factor:		Before Depr:	356.60
Special Features:	2600	Val/Su Net:	267.66
Final Total:	2264100	Val/Su SzAd	536.15

IMAGE

AssessPro Patriot Properties, Inc

MOBILE HOME

Make:		Model:		Serial #		Year:		Color:	

SPEC FEATURES/YARD ITEMS

PARCEL ID 25B-0-33D

Code	Description	A	Y/S	Qty	Size/Dim	Qual	Con	Year	Unit Price	D/S	Dep	LUC	Fact	NB Fa	Appr Value	JCod	JFact	Juris. Value
96	WHIRL PL	A	S	1	2	A	AV	2002	1,500.00	T	12	101			2,600			2,600

More:	N	Total Yard Items:		Total Special Featues:	2,600	Total:	2,600